KW-71-3 Anemometer with Alarm Function

The KW-71-3 connects a sensor to both an alarm unit and either an indicator or a recorder component. The indicator displays instantaneous wind speed, and the alarm unit can be set to sound at three different user-defined speeds. Moreover, the KW-71-3 also includes an internal timer that can be set to trigger an alarm signal when wind speed continuously exceeds a set alarm value for a given length of time.

Diagram of Anemometer w/Alarm Function

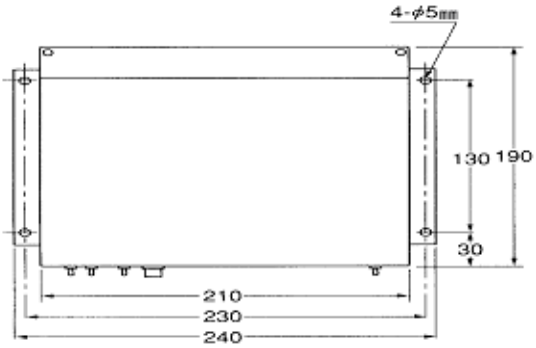

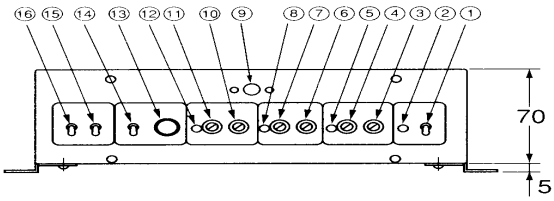

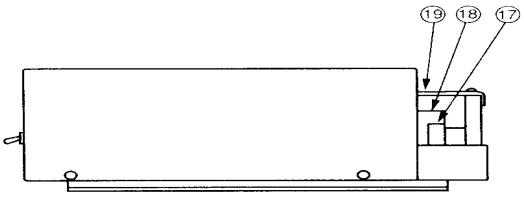

APPLICATIONS Recreational facilities such as ski lifts or ropeways, construction sites, etc.

FEATURES

1. A user can choose to connect either an indicator or a recorder.
2. The alarm unit allows for three user-defined alert levels.
3. A timer can be set.

SPECIFICATIONS

Sensor

Startup threshold	<2m/s
Weatherability	Winds ≥90 m/s
Generator	AC generator
Output	30 V AC ±1 V at 60 m/s

Alarm unit The alarm unit has three separate alarm circuits (ALARM 1-3), and features adjustable alarm volume, a timer, a relay, and a buzzer.

Alarm signal types	ON and OFF for each of ALARM 1-3 relay contacts (2 circuits each , indicator lamps (yellow, red, red), buzzer
Alarm setting range	Volume can be used to set each of ALARM 1-3 to sound at desired level for winds 3 m/s and greater.
Delayed alarm timer	Timer available on each of ALARM 1-3, and can be set using volume knob to sound approx. 0.1-12 s. For each of ALARM 1-3, the buzzer is sounded when specified wind speed and time limits are exceeded.
Output contact capacitance	Max. current: resistance load 2A induction load 1A Max. voltage: AC 250 V DC 125 V Rated current 3A Max. operating cap., resistance load 60 W 110 V A
Buzzer stop switch	Set switch to OFF to prevent buzzer from sounding
Buzzer volume	Use to set buzzer volume
Power source	100 V AC ±10 V (200 V AC)
Power consumption	≤7 V A
Size/weight	Sensor: approx. 304 mm diam. × 353 mm, 1.0 kg Alarm: approx. 240 × 190 × 70 mm, 2.2 kg

① Power switch (POWER)
② Green power lamp
③ ALARM 3 timer, set volume (TIM)
④ ALARM 3, set volume (SET)
⑤ ALARM 3 red lamp
⑥ ALARM 2 timer, set volume (SET)
⑦ ALARM 2, set volume (SET)
⑧ Red alarm lamp
⑨ Buzzer
⑩ ALARM 1 timer, set volume (TIM)
⑪ ALARM 1, set volume (SET)
⑫ ALARM 1 red lamp
⑬ Select alarm switch (ALARM)
⑭ Switch to select alarm for setting (SET/MEAS)
⑮ Stop buzzer switch (STOP)
⑯ Buzzer volume switch (LARGE/SMALL)
⑰ Fuse 0.5A
⑱ Terminal box, M3 screw
⑲ Terminal box cover

KOMATSU FACTORY CO.,LTD.
TOKYO
WEATHER INSTRUMENTS FABRICATION
1-12-13 Higashiyama Meguro-ku Tokyo 153-0043 Japan
TEL : 03-3719-7131
FAX : 03-3719-7134
e-mail : info@komatsuins.co.jp